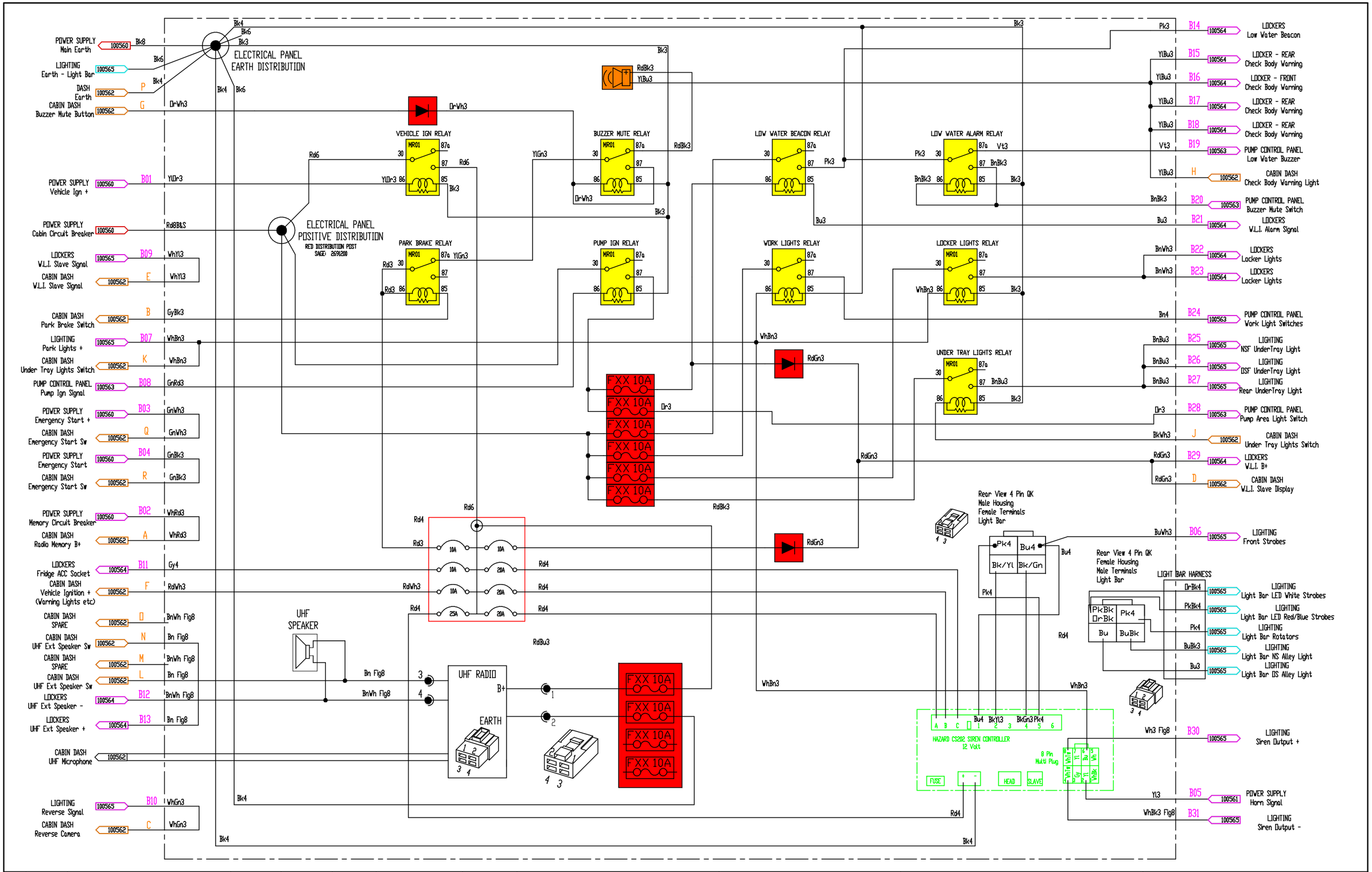

REV	DATE	DESCRIPTION	DRAWN	APPR	DATE
0	07/04/2020	APPROVED FOR CONSTRUCTION	D FILMER	D FILMER	07/04/2020

SCALE: 2:1 | SIZE: A1
DRAWN: D FILMER | DATE: 07/04/2020
CHECKED: M FILMER | DATE: 07/04/2020
APPROVED: D FILMER | DATE: 07/04/2020

NOTES: NOT TO SCALE

UNITS: mm (UNLD)
TOLERANCE: (UNLD)

0mm	± 1.50
0.0mm	± 1.00
0.00mm	± 0.10
0.000mm	± 0.01

QUIK CORP

37 Production Avenue
Warana QLD 4575
www.quikcorp.com.au
"the reel experts"

PROPRIETARY AND CONFIDENTIAL
THE INFORMATION CONTAINED IN THIS DRAWING IS THE SOLE PROPERTY OF QUIK CORP PTY LTD. ANY REPRODUCTION IN PART OR AS A WHOLE WITHOUT THE WRITTEN PERMISSION OF QUIK CORP PTY LTD IS PROHIBITED.

DESCRIPTION:
CABIN ELECTRICAL PANEL SCHEMATIC
RFBAQ - LIGHT ATTACK
TOYOTA LANDCRUISER

DRAWING NO. 100561
SHEET 1 OF 1 | REVISION 0